For Global Market

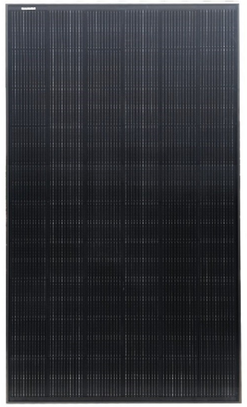

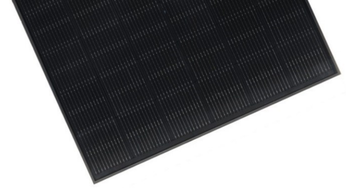

MaysunSolar

Monocrystalline PV Module

MS(290-320)M-60 Series

12BB

- High PID resist performance
- Excellent low light performance with advanced surface texturing and back surface field.
- Multi-busbar design decreases the risk of the cell micro-cracks and fingers broken.
- Lower series resistance/improved light harvesting enable high conversion efficiency and more power output.

290	295	300	305	310	320

System voltage 1000V/1500V standard

EN

ELECTRICAL SPECIFICATIONS

STC rated output (P_{mpp})*	290 Wp	295 Wp	300 Wp	305 Wp	310 Wp	320 Wp
PV Module size	1665*1002*35 MM					
Standard sorted output	0/+5 Wp					
Warranted power output STC ($P_{nominal}$)	290 Wp	295 Wp	300 Wp	305 Wp	310 Wp	320 Wp
Rated voltage (V_{mpp}) at STC	32.45 V	32.81 V	32.93 V	33.11 V	33.41 V	34.19 V
Rated current (I_{mpp}) at STC	8.94 A	8.99 A	9.11 A	9.21 A	9.28 A	9.35 A
Open circuit voltage (V_{oc}) at STC	39.26 V	39.26 V	39.85 V	40.03 V	40.43 V	40.50 V
Short circuit current (I_{sc}) at STC	9.47 A	9.58 A	9.66 A	9.74 A	9.84 A	9.97 A
Module efficiency	17.8%	18.1%	18.4%	18.7%	19.1%	19.7%
Rated output (P_{mpp}) at NOCT	213.2 Wp	215.5 Wp	220.5 Wp	224.5 Wp	227.9 Wp	234.5 Wp
Rated voltage (V_{mpp}) at NOCT	29.21 V	29.35 V	29.64 V	29.93 V	30.07 V	30.64 V
Rated current (I_{mpp}) at NOCT	7.30 A	7.34 A	7.44 A	7.50 A	7.58 A	7.66 A
Open circuit voltage (V_{oc}) at NOCT	36.36 V	36.64 V	37.08 V	37.26 V	37.42 V	37.82 V
Short circuit current (I_{sc}) at NOCT	7.77 A	7.83 A	7.92 A	7.97 A	8.07 A	8.27 A

Temperature coefficient (P_{mpp})	- 0.380%/K
Temperature coefficient (I_{sc})	+0.042%/K
Temperature coefficient (I_{mpp})	- 0.008%/K
Temperature coefficient (V_{mpp})	- 0.373%/K
Temperature coefficient (V_{oc})	- 0.284%/K
Normal operating cell temperature (NOCT)	46±2°C

Maximum system voltage (IEC)	1000V_{DC} / 1500V_{DC}
Number of diodes	3
Maximum series fuse rating	15 A
Operating Temperature	-40°C to +85°C

* Measurement tolerance +/- 3%

IEC 61701 Salt Spray test Severity (3)

IEC 60068-2-68 Sand test

IEC 62804 1500V PID test

MAYSUN SOLAR

RELATED PARAMETERS

Cell type	Monocrystalline
Number of cells / cell arrangement	60 / 6 x10
Cells dimension	6.25"
Packing unit	30 modules
Weight of packing unit (for container)	587 kg / 1294 lbs

MECHANICAL SPECIFICATIONS

Outer dimensions (L x W x H)	1665 x1002 x 35 mm 65.55 x 39.45 x 1.38 in
Frame technology	Aluminum, Black anodized
Module composition	Glass / EVA / Backsheet (black)
Weight (module only)	19 kg / 41.89 lbs
Front glass thickness	3.2 mm / 0.13 in
Junction box IP rating	IP 65/67
①Cable length(IEC)	600/900 mm / 23.62/35.43 in
Cable diameter (IEC)	12 AWG /4 mm^2
②Maximum load capacity	5400 Pa
Fire performance (IEC)	Class C
Connector type (IEC)	MC4 compatible

Refer to Maysun Solar crystalline installation manual.

QUALIFICATION AND LINEAR WARRANTIES

Product standard	IEC61215, 61730
Extended product warranty	12 years
Output decline 2%/year performance P_{mpp} (STC)	1st year
Output decline 0.5%/year performance P_{mpp} (STC)	2nd~ 25th years

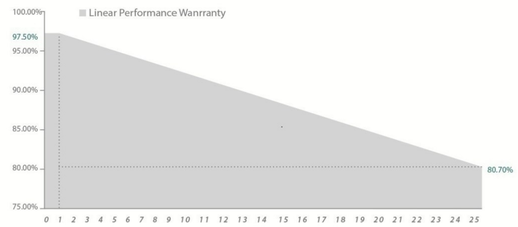

I-V Curves of PV module MS290M-60 at various solar irradiance

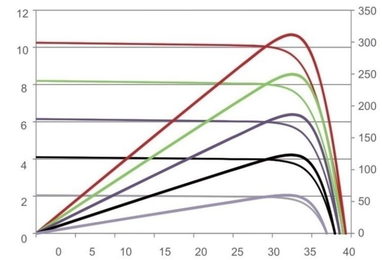

MODULE DIMENSION DETAILS

Front view | Side view | Rear view | Frame cross section

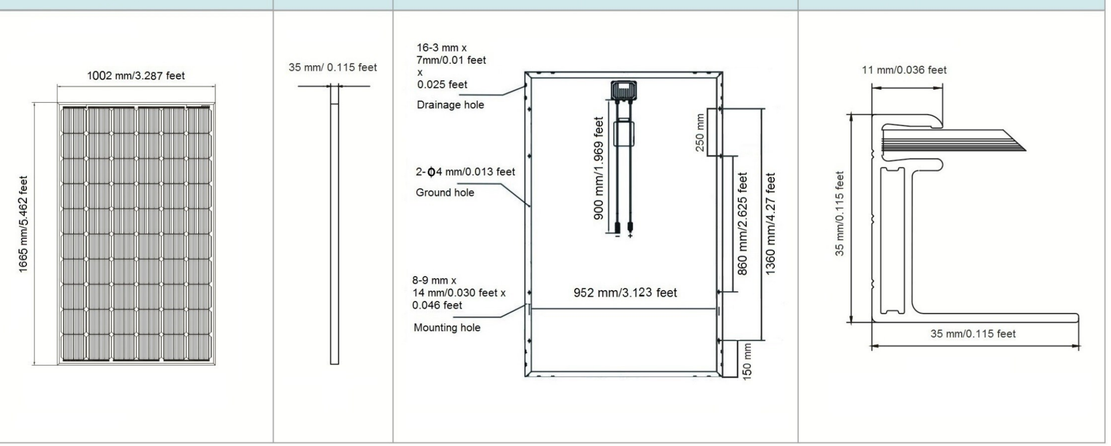

Maysun Solar FZCO Reserves the right of final interpretation.
Specifica tions and designs included in this datasheet are subject to change without notice.

Maysun Solar FZCO
Address: No.FZS2AB01, Jebel Ali, Dubai, UAE
Website: www.maysunsolar.com